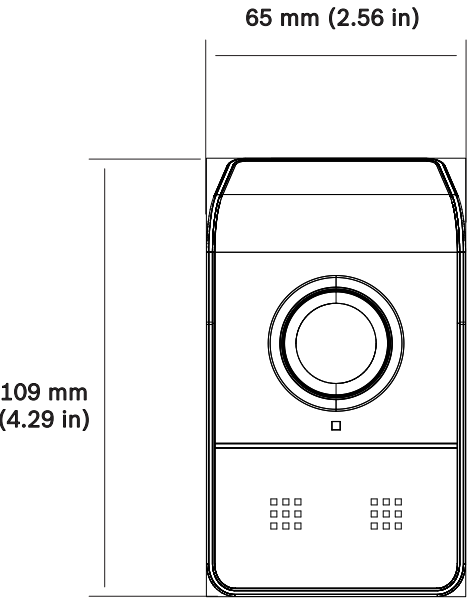
65 mm (2.56 in)
109 mm
(4.29 in)

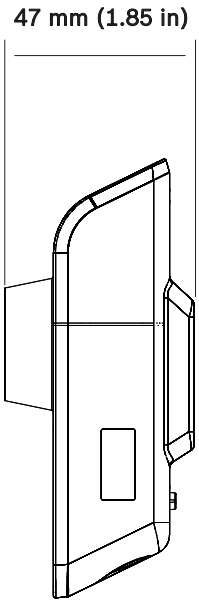
47 mm (1.85 in)

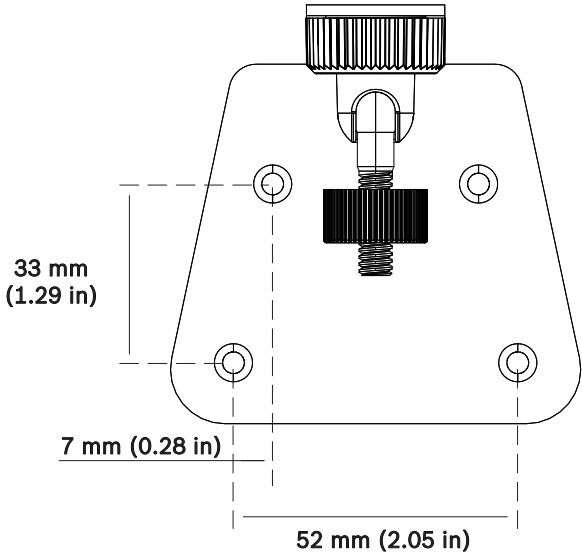
33 mm
(1.29 in)
7 mm (0.28 in)
52 mm (2.05 in)

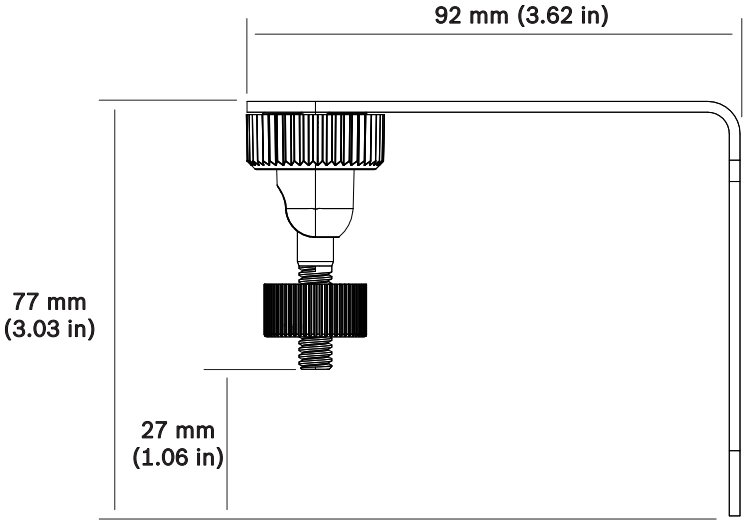
92 mm (3.62 in)
77 mm
(3.03 in)
27 mm
(1.06 in)

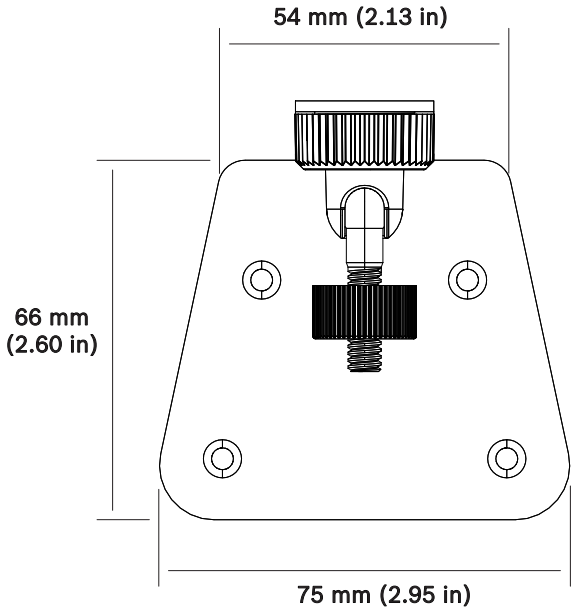
54 mm (2.13 in)
66 mm
(2.60 in)
75 mm (2.95 in)