# D8024 Analog Fire Alarm Control Panel

## Installation Guide

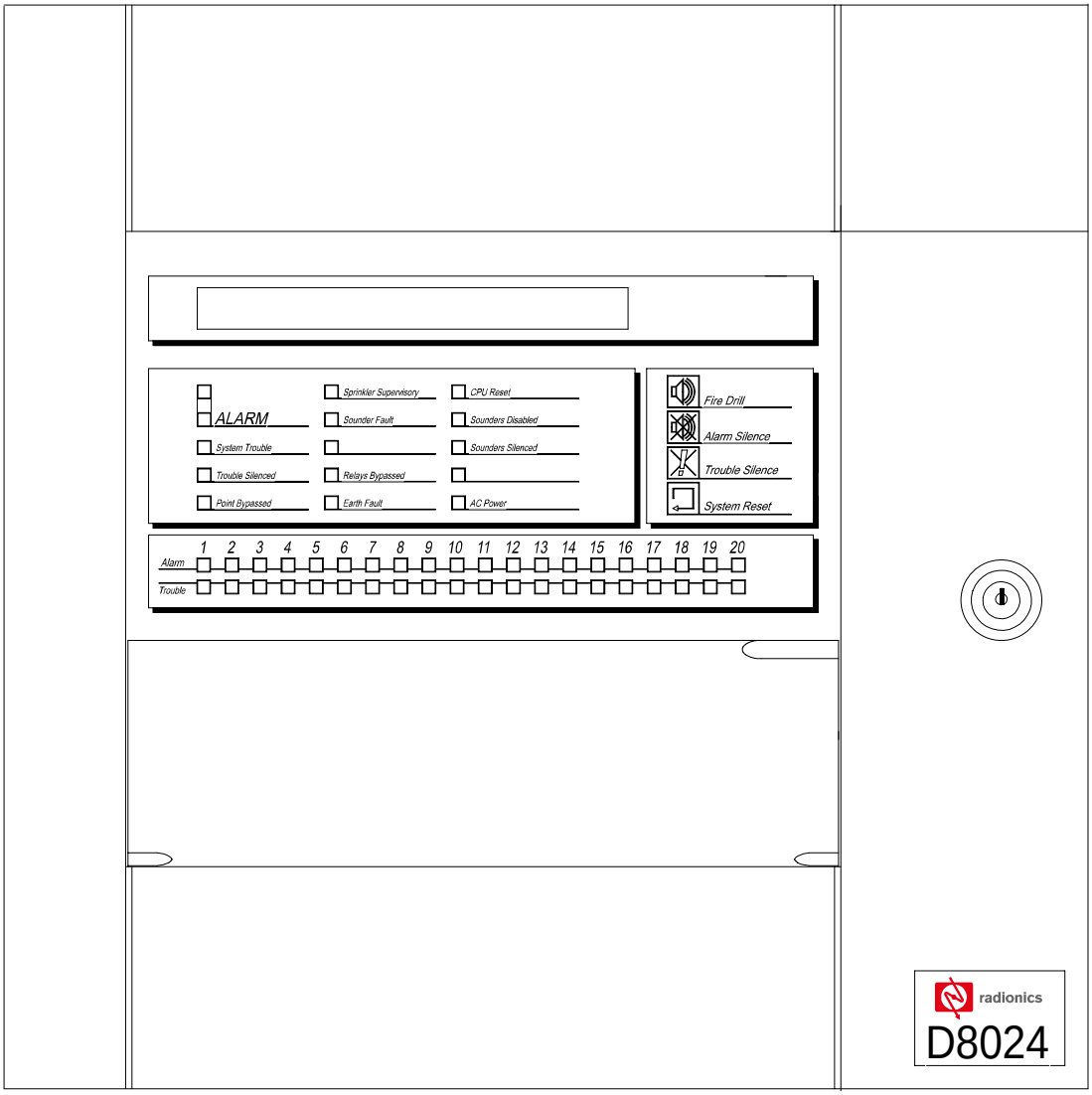


radionics

A member of the Bosch Group

This page is intentionally blank.

 Copyright © 2001 Radionics

# Contents

**1.0 Notices ..... 5**
1.1 General Notices ..... 5
1.2 FCC Notice ..... 5
1.2.1 Part 15 ..... 5
1.3 UL/NFPA Notice ..... 5
**2.0 Overview ..... 7**
2.1 System Overview ..... 7
2.2 D8024 Control Module ..... 7
2.3 Specifications ..... 8
2.4 Standby Battery Selection ..... 9
2.5 Compatible Devices ..... 11
**3.0 Enclosure Installation ..... 13**
**4.0 Terminal Connections ..... 15**
4.1 Power Connections ..... 15
4.1.1 AC Power Connections ..... 15
4.1.2 Control Module/Power Supply Connections ..... 16
4.2 Circuit Connections ..... 16
4.2.1 Polling Circuit ..... 16
4.2.1.1 D9067 Polling Circuit Module Installation ..... 17
4.2.1.2 Class B, Style 4 Circuit Connections ..... 18
4.2.1.3 Class A, Style 6 Circuit Connections ..... 19
4.2.2 Peripheral Circuit ..... 20
4.2.2.1 D9051 RS-485 Bus Module Installation ..... 20
4.2.2.2 Peripheral Circuit Wiring (Port D) ..... 21
4.2.2.3 Network Circuit Wiring (Port C) ..... 21
4.2.2.4 Panel Network Connections ..... 22
4.2.2.5 D9052 RS-232 Bus Module Installation ..... 23
4.2.3 Notification Appliance Circuit (NAC) and Output Circuit Connections ..... 24
4.2.4 Central Station/Remote Application (D2071A DACT) ..... 25
4.2.5 Sprinkler Supervision (D2071A DACT) ..... 27
4.2.6 Trouble Annunciation (D2071A DACT) ..... 28
4.2.7 Remote Signaling (D185 Reverse Polarity Module) ..... 29
**Index ..... 31**


Copyright © 2001 Radionics

# Figures and Tables

## Figures

Figure 1: D8024 Control Module ..... 8
Figure 2: D8024 Enclosure Interior ..... 13
Figure 3: 120 VAC Input Connections ..... 15
Figure 4: Control Module/Power Supply Connections ..... 16
Figure 5: D9067 Installation ..... 17
Figure 6: D9067 Installation (side view) ..... 18
Figure 7: Class B, Style 4 Circuit Connections ..... 18
Figure 8: Class A, Style 6 Circuit Connections ..... 19
Figure 9: Earth Ground Connections ..... 19
Figure 10: Port Locations for the D9051 RS-485 Bus Module ..... 20
Figure 11: Port D Peripheral Circuit Wiring ..... 21
Figure 12: Port C Network Circuit Wiring ..... 22
Figure 13: Port Locations for the D9052 RS-232 Bus Module ..... 23
Figure 14: D9052 Serial Input/Output Connections ..... 24
Figure 15: NAC, Auxiliary Power and RelayTerminals ..... 24
Figure 16: D8024 to D2071A Wiring Connections ..... 26
Figure 17: Wiring the D8024 for Sprinkler Supervision ..... 27
Figure 18: Wiring the D2071A for Trouble Annunciation on the D8024 ..... 28
Figure19: Remote Station Signaling ..... 29

## Tables

Table 1: Current Rating Chart for Standby Battery Calculations ..... 9
Table 2: Polling Circuit Length/Wire Gauge ..... 16
Table 3: D9067 LED Functions ..... 17
Table 4: RS-485 Peripheral Circuit Length/Wire Gauge ..... 20
Table 5: Sprinkler Supervisory Reporting Conditions ..... 28

 Copyright © 2001 Radionics

# 1.0 Notices

## 1.1 General Notices

WARNING

***These instructions contain procedures to follow in order to avoid personal injury and/or damage to the equipment.***

IMPORTANT

***Any equipment installed is to be done so in accordance with the National Electrical Code (NFPA 70), the National Fire Alarm Code (NFPA 72) and the local Authority Having Jurisdiction (AHJ). Radionics is not responsible for any equipment that is not installed according to these regulations.***

IMPORTANT

***NFPA 72 requires a complete system-wide functional test be performed following any modifications, repair, upgrades or adjustments made to the system's components, hardware, wiring, programming and software/ firmware.***

The material and instructions covered in this installation guide have been carefully checked for accuracy and are presumed to be reliable. However, the manufacturer assumes no responsibility for inaccuracies and reserves the right to modify and revise this installation guide without notice.

This installation guide covers the installation of the D8024 Analog Fire Alarm Control Panel (FACP). See the D8024 Operator's Guide (P/N: 35394) for instructions on powering up and operating the D8024.

## 1.2 FCC Notice

### 1.2.1 Part 15

This equipment has been tested and found to comply with the limits for a Class A digital device, pursuant to Part 15 of the FCC Rules. These limits are designed to provide reasonable protection against harmful interference in a commercial installation. This equipment generates, uses and can radiate radio frequency energy, and, if not installed in accordance with the instructions, may cause harmful interference to radio communications. However, there is no guarantee that interference will not occur in a particular installation. If this equipment does cause harmful interference to radio or television reception, which can be determined by turning the equipment on and off, the user is encouraged to try to correct the interference by one or more of the following measures:

1) Reorient or relocate the receiving antenna.
2) Increase the separation between the equipment and the receiver.
3) Connect the equipment into an outlet on a circuit different from that to which the receiver is connected.
4) Consult the dealer or an experienced radio/TV technician for help.

## 1.3 UL/NFPA Notice

Radionics' D8024 Analog Fire Alarm Control Panel is UL Listed for NFPA 72, Central Station and Remote Station.

All references to NFPA and related requirements are based upon compliance with the 1993 edition of NFPA 72, National Fire Alarm Code. Since installation specifications are nearly always based upon a specific edition of a standard which has been legally adopted by the Authority Having Jurisdiction (AHJ), earlier editions of NFPA standards will generally apply. Consult with the appropriate AHJ for confirmation.


Copyright © 2001 Radionics

# Notices

**Notes:**

 Copyright © 2001 Radionics

# 2.0 Overview

## 2.1 System Overview

Radionics' D8024 Analog Fire Alarm Control Panel (FACP) is an expandable control panel that provides point identification through addressable analog devices. The D8024 has two expansion slots to accommodate plug-in polling circuit modules. Each of these polling circuit modules can support up to 126 analog addresses, giving the panel a potential of 252 addressable points. Flexibility in system design allows the option of grouping device points together and identifying them as one location, or zone, in order to simplify system operation.

The D8024 includes the following features:

- Analog design using advanced communications protocol
- 80 character display
- Custom text annunciation
- Up to 252 addresses supported in a stand-alone system
- Can be networked with Radionics' D9024 and D10024 Analog FACPs as well as other D8024 FACPs
- 24 VDC, 2.5 A power supply and battery charger
- Programmable sensitivity levels by device
- Programmable "day/night" sensitivity levels
- PC programmable
- Service mode polling
- Fire test mode
- Event activity logger (up to 500 events)
- Suitable for ADA applications
- Meets NFPA National Fire Code standards

## 2.2 D8024 Control Module

Analog reporting devices initiate alarm conditions through the FACP. The analog FACP interacts with its reporting devices in a system that is constantly measuring not only its environment, but also its own ability to report on that environment. The FACP analyzes the measurements, compares them with other measurements, thresholds, the reported contamination of the devices, the time of day, and other programmed standards. Depending on the results of these comparisons, the Analog FACP may initiate an alarm, service, or a trouble condition. The FACP supervises and responds individually to each analog device in the circuit.

When the analog system configures the polling circuits, the control panel downloads a number of parameters, which have been programmed into the panel and are stored in the Central Processing Unit (CPU), to each analog device. These levels can be altered through the front panel or PC programming. Each device is programmed for:

- Alarm Level
- Pre-Alarm Level
- Service Level


Copyright © 2001 Radionics

# Overview

The D8024 Control Module is the input/output Printed Circuit Board (PCB)/Central Processing Unit (CPU). The control module, the on-board power supply, the transformer, and the input wiring connections are all mounted on a skirt.

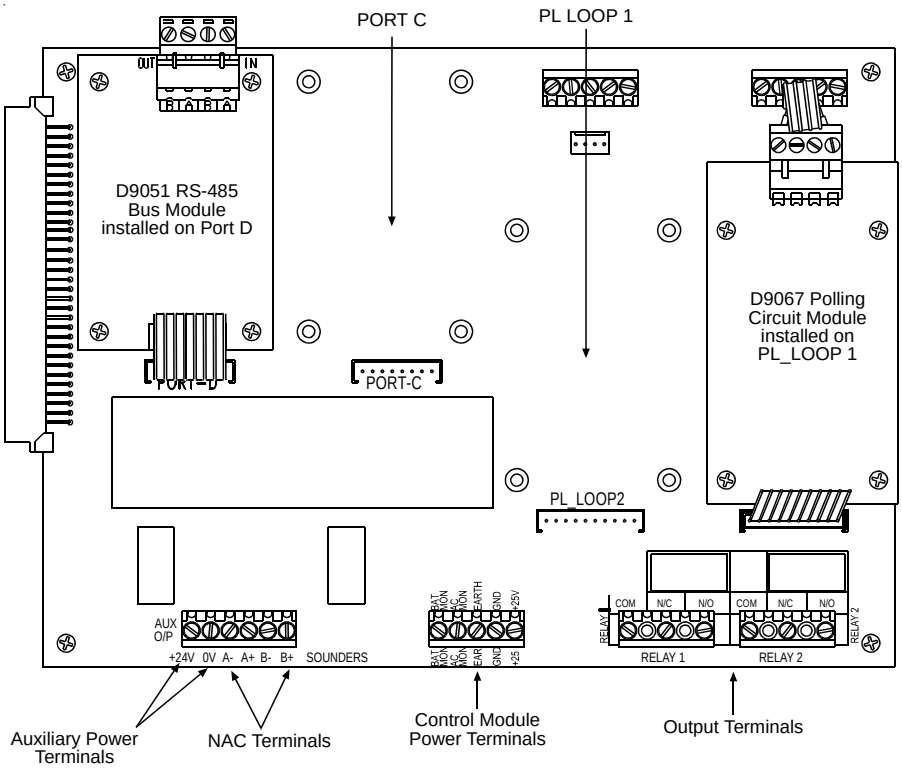


**Figure 1: D8024 Control Module**

## 2.3 Specifications

- **Operating Voltage:** 120 VAC, 60 Hz
- **Operating Current:** 325 mA (control panel), 30 mA/circuit + sensor load (polling circuit)
- **Power Supply:** 24 VDC nominal at 3 A
- **Brown-out Voltage:** 103 VAC
- **Operating Temperature:** +32°F to +120°F (0°C to +49°C), non-condensing
- **Notification Appliance Circuit (NAC):** two programmable, 1 A output max; 6.8 k Ω supervised EOL resistor
- **Auxiliary Output Power:** 24 VDC, 340 mA maximum
- **On-board Relays (dry contacts):** two Form “C” contacts rated at 1 A, 24 VDC max/relay
- **Sensor Circuit:** supports up to two D9067 Polling Circuit Modules; up to 7,200 ft. (2,195 m); #16 AWG (1.5 mm) wire; supports Class A wiring
- **Sensor Circuit Wiring Requirements:** 28 pF/ft. nominal capacitance; 3 Ω/1,000 ft. typical cable resistance; 25 Ω maximum loop resistance; recommended maximum loop capacitance should not exceed 0.25 µF
- **Maximum Number of Devices:** 126 per circuit; two circuits maximum
- **Sensor Circuit Protection:** power limited; automatic overcurrent protection
- **Display:** 2-line by 40-character LCD; 20 LED fire zone indicators; 20 LED zone fault indicators; 10 LED system indicators
- **Keyboard:** membrane with snap dome; 21 key alphanumeric keypad
- **Dimensions:** 15.5 x 15.8 x 5.5 in. (39.4 x 40.0 x 14.0 cm) (H x W x D)
- **Listings and Approvals:** UL864 Listed (Commercial Fire Alarm, **Type Service:** Local, Remote, Central Station; **Type Initiating:** Automatic, Manual, Sprinkler Supervisory and Waterflow); CSFM

 Copyright © 2001 Radionics

## 2.4 Standby Battery Selection

***Note:*** *Any device that is connected to the D9067's polling circuit draws its current from the D9067, which is connected to the panel. Since the panel and the D9067 limit the amount of current drawn by the device on the circuit, the device's current draw is already accounted for and does not need to be figured into the standby battery calculations.*

Use Table 1 for standby battery calculations.

| 1000 µA = 1 mA<br>1000 mA = 1 A | | AC Power ON<br>Normal Current **A** | | AC Power OFF<br>Min. Current **B** | | Alarm<br>Max. Current **C** | |
|---|---|---|---|---|---|---|---|
| **Model #** | **Qty** | **Each Unit** | **Total mA (units x qty)** | **Each Unit** | **Total mA (units x qty)** | **Each Unit** | **Total mA (units x qty)** |
| D8024 | 1 | 90 mA | | 90 mA | | 250 mA | |
| D9067 | | 42 mA | | 42 mA | | 42 mA | |
| D9051 | | 59 mA | | 59 mA | | 59 mA | |
| D9052 | | 59 mA | | 59 mA | | 59 mA | |
| D9053* | | 35 mA | | 35 mA | | 200 mA | |
| D9054* | | 40 mA | | 40 mA | | 100 mA | |
| D9069 | | 35 mA | | 35 mA | | 125 mA | |
| D9070 | | 35 mA | | 35 mA | | 125 mA | |
| D9072 | | 120 mA | | 120 mA | | 220 mA | |
| D9073 | | 125 mA | | 125 mA | | 125 mA | |
| | | | | | | | |
| | | | | | | | |
| | | | | | | | |
| | | | | | | | |
| | | | | | | | |
| | | | | | | | |
| | | | | | | | |
| | | | | | | | |
| | | | | | | | |
| | | | | | | | |
| | | | | | | | |
| | | | | | | | |
| | | | | | | | |
| | | Total **A** mA | | Total **B** mA | | Four in Alarm ** | 18.9 mA |
| | | | | | | Total **C** mA | |

**Table 1: Current Rating Chart for Standby Battery Calculations**

***Note:*** *See page 10 for * and ** references.*


Copyright © 2001 Radionics

# Overview

* Add 1.5 mA per output when flashing

** The panel latches on to the first four devices in alarm and continues polling the balance of the devices. 4 x 5 mA alarm current = 20 mA. These four devices normally draw a minimum 280 µA each. 20 mA - 1.12 mA (4 x 0.280) = 18.9 mA added to the alarm total.

The D8024 panel supervises and charges the two 12 V sealed lead-acid batteries that are the standby power source. Several batteries are available from Radionics, and battery selection will depend on system design. Use the Current Rating Chart to select the correct batteries.

Use battery ampere hour (Ah) calculations to verify compliance with standby requirements. Central Station or Local systems require 24 hours of standby plus five minutes of alarm operation at the end of that period.

The following formulas convert mA to Amperes, and includes factors for the five minute alarm period and the depletion of battery capacity with age:

**Local Systems Ampere Hour Calculation Formula**

| | | | | | | | |
|---|---|---|---|---|---|---|---|
| Total B / 1000 | x | 24 (hours) | + | Total C / 1000 | x | 0.083 (hours) | = Total Ah |

Total Ah x 1.1 = Total Ah Requirements

**Remote Station Service Ampere Hour Calculation Formula**

| | | | | | | | |
|---|---|---|---|---|---|---|---|
| Total B / 1000 | x | 60 (hours) | + | Total C / 1000 | x | 0.083 (hours) | = Total Ah |

Total Ah x 1.1 = Total Ah Requirements

IMPORTANT

***The maximum battery size permitted for connection to the D8024 is 17 Ah. For Remote Station Service, the standby current of the panel x 60 + the alarm current of the panel x the alarm minutes calculation (0.083 x the alarm current). This total x 1.1 must not exceed 17 Ah.***

 Copyright © 2001 Radionics

## 2.5 Compatible Devices

Below is a list of the devices that are compatible with the D8024. This list offers only brief descriptions of each device. Please consult the specific device's installation guide for complete installation, wiring and programming information.

- **D321A Analog Detector Base:** 6 in. diameter, low profile detector base. Compatible with D322A, D323A, D324A Analog Detector Heads. Can be installed in either a Class A (four-wire) or Class B (two-wire) analog polling circuit. Base security locking tab locks the detector head to the base to allow for ease of wiring and to prevent tampering.
- **D322A Analog Heat Detector:** Communicates with FACP via advanced digital communications protocol. Linear thermistor circuit is reliable and durable without being sensitive to changes in humidity, barometric pressure and air flow. Dual LEDs flash when the detector is polled and latch steady when detector goes into alarm condition. Programmable fixed temperature actuation points (default is 142°F, 61°C).
- **D323A Analog Photoelectric Smoke Detector Head:** Communicates with FACP via advanced digital communications protocol. Photodiode measures particulate levels in detection chamber and transmits measurements digitally to FACP. Unique chamber design prevents external light from affecting photodiode. Sensitivity levels can be modified at FACP. Dual LEDs flash when the detector is polled and latch steady when detector goes into alarm condition.
- **D324A Analog Ionization Smoke Detector Head:** Communicates with FACP via advanced digital communications protocol. Dual ionized chambers (one sealed, one open) measure particulate levels and transmits measurements digitally to FACP. Dual LEDs flash when the detector is polled and latch steady when detector goes into alarm condition.
- **D325A Analog Manual Fire Alarm Pull Station:** Communicates with FACP through its internal point contact module. Die-cast housing mounts to single gang box and conforms to Americans with Disabilities Act for activation force and operation. Key-resettable. Can be converted to double action with the D463 Double Action Cover. Optional glass break rod available.
- **D326A, D334A, D339A Analog Point Contact Modules:** Allow the FACP to supervise Form "A" and Form "B" dry contact devices on polling circuit. Modules allow for alarm trouble and supervisory conditions. D326A mounts to a 4 in. gang box; visible status display LED. D334A is mounted inside plastic casing and attaches inside single gang box allowing initiating device, such as a pull station, to mount over it. D339A can mount inside back box of any size.
- **D327A Analog NAC Module:** Provides connection terminals for a NAC device and auxiliary power to NAC device. Visible polling LED.
- **D328A Analog Relay Module:** Provides connection terminals for auxiliary system controls such as elevator recall systems or HVAC shutdown. Can be programmed to activate a variety of system conditions, such as alarm, trouble and event. Visible polling LED.
- **D336A Analog Detector Base:** 4 in. diameter, low profile detector base. Mounts flush with detector head. Compatible with D322A, D323A, D324A Analog Detector Heads. Can be installed in either a Class A (four-wire) or Class B (two-wire) analog polling circuit. Base security locking tab locks the detector head to the base to allow for ease of wiring and to prevent tampering.
- **D9051 RS-485 Bus Module:** Provides an optically isolated data interface between FACP and peripheral devices. Depending on which FACP port the D9051 is connected to, it can support a peripheral circuit, an RS-485 panel-to-master data link, a panel-to-graphics data link or an RS-485 output to networked panels.
- **D9052 RS-232 Bus Module:** Provides a two-way, optically isolated RS-232 interface used to connect to peripheral systems. Communicates with serial devices.
- **D9055 3 A NAC Booster:** Provides 3 A of 24 VDC power. Supervises the NAC, its power supply and the standby battery supply.
- **D9060 PC Programming Software (Fire 5x):** Allows for complete circuit programming via a remote PC or laptop.
- **D9061 Graphics Display Software:** Dual runtime/graphic display software package. Runtime software enables the user to control and monitor the FACP(s) and detection devices within the system. Graphics software allows a designer to create picture representations of a site or building and its fire system. CAD drawings can be imported and modified inside the program, or the detailed drawing tools can be used to create pictures.
- **D9067 Polling Circuit Module:** Functions as the connection point between polling circuit wiring and the FACP.
- **D9069 Fire System Annunciator:** Remote annunciator designed for use in public places to annunciate system events only; no provision for system control.


Copyright © 2001 Radionics

# Overview

- **D9070 Fire System Controller:** Combines system annunciator functions with limited system control functions. Designed for use in public places. Keyed switch enables/disables keypad.
- **D9072 Four-Output NAC Module:** Provides connection points for up to four NACs. Supervises NACs and detects open circuit and ground fault conditions. Trouble conditions reported to FACP. DIP switch addressable.
- **D9073 High Integrity RS-485 Bus Module:** Provides unrestricted, bi-directional RS-485 data communication between devices in a Class A circuit. Supervises the circuit and detects and isolates open circuit and ground fault conditions. DIP switch addressable.
- **D9078 LED Driver:** Graphic annunciator driver board that interprets alarm and trouble data from the FACP. Can be used to provide graphic annunciation or activate remote relays.

 Copyright © 2001 Radionics

## 3.0 Enclosure Installation

Depending on the configuration and the battery selection, the D8024 FACP can weigh more than 40 lbs. (18 kg). When attaching the enclosure to a surface, use mounting hardware (not supplied) capable of supporting this weight, and reinforce the wall as necessary.

CAUTION

***Route the 120 VAC wiring into the enclosure at the upper right corner only. Keep AC wiring away from the circuit boards and all other wiring.***

***Note:*** *For power limited circuits, use types FPL, FPLR or FPLP wiring, or approved equivalent wiring, as applicable per NEC, Article 760.*

1) Remove the necessary knockouts and install conduit fittings.
2) Mount the enclosure in the desired location. Use all four mounting holes.
3) Run the necessary wiring throughout the premises and pull the wires into the enclosure. Knockouts are provided at the top of the enclosure. If you punch other holes, be sure not to let them interfere with the component mounting locations.

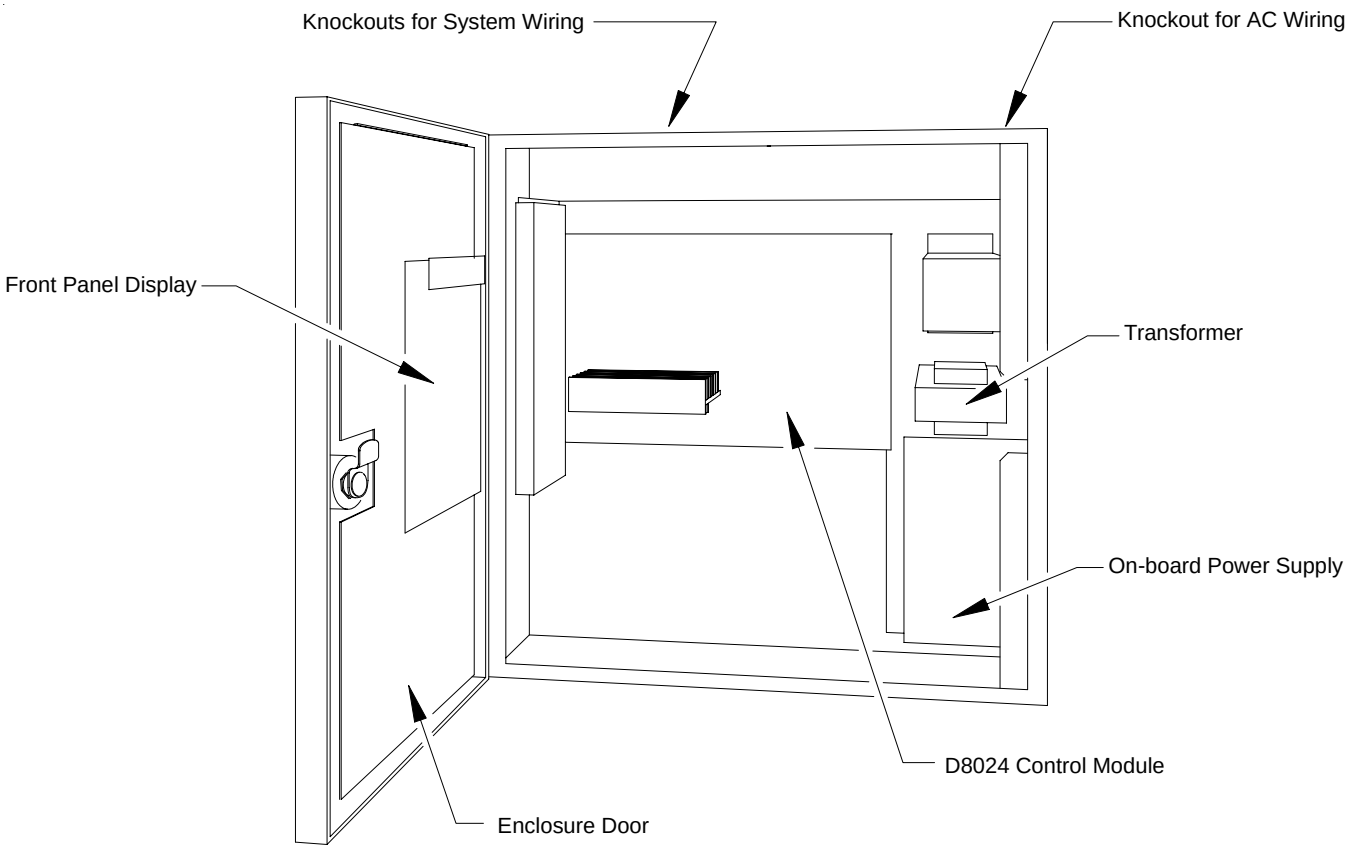


**Figure 2: D8024 Enclosure Interior**


Copyright © 2001 Radionics

# Enclosure Installation

**Notes:**

 Copyright © 2001 Radionics

# 4.0 Terminal Connections

WARNING

***Remove all power (AC and battery) before making any wiring connections. Failure to do so may result in personal injury and/or damage to equipment.***

CAUTION

***For power limited circuits, use types FPL, FPLR or FPLP wiring, or approved equivalent wiring, as applicable per NEC, Article 760.***

## 4.1 Power Connections

### 4.1.1 AC Power Connections

The D8024 receives power from a 120 V, 60 Hz, AC power supply through a dedicated breaker. From the breaker, current flows through the input wiring terminals, through a 2 A fuse, through an EMI filter to the transformer, which converts 120 VAC to 24 VAC. All of these components are mounted to the skirt at the factory, and the only field connection is the 120 VAC input connection.

Radionics recommends that only a licensed electrician make 120 VAC connections to the D8024 system. All connections are to conform to NFPA 70/NEC. Connect the D8024 system to a suitable ground.

CAUTION

***Maintain separation between 120 VAC and low voltage wiring. Do not route them in the same conduit. Keep them apart inside the enclosure.***

Follow these steps when making the AC power connections:

1) Connect the ground wire (green) to the ground input terminal (left terminal) on the 2 A fuse holder.
2) Connect the 120 VAC neutral wire (white) to the middle terminal.
3) Connect the positive line wire (black) to the right terminal.

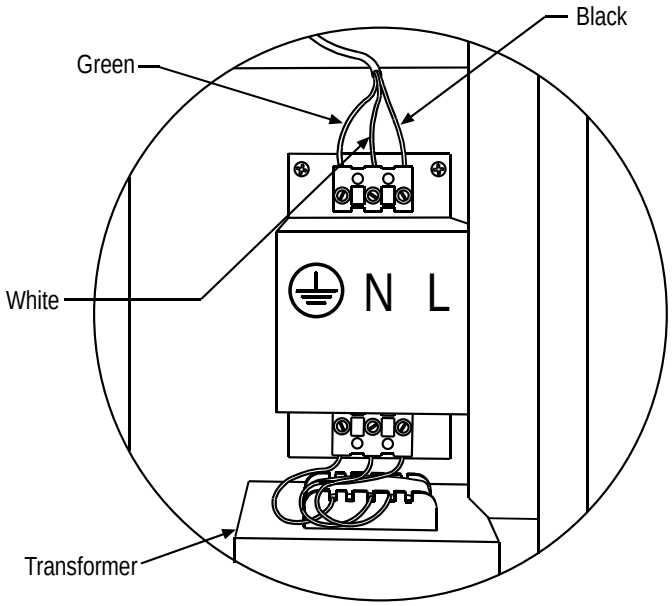


**Figure 3: 120 VAC Input Connections**

IMPORTANT

***The input to the D8024 must be controlled by a dedicated breaker switch ("Isolate Elsewhere"). The minimum cross sectional area of the main supply cables is 0.75 mm. The input cables are fused through a 3 A anti-surge fuse.***


Copyright © 2001 Radionics

# Terminal Connections

### 4.1.2 Control Module/Power Supply Connections

Panel upgrades and modifications may require the removal of the D8024 Control Module from the panel enclosure. The correct wire connections to terminals at the lower right side of the control module are shown in Figure 4.

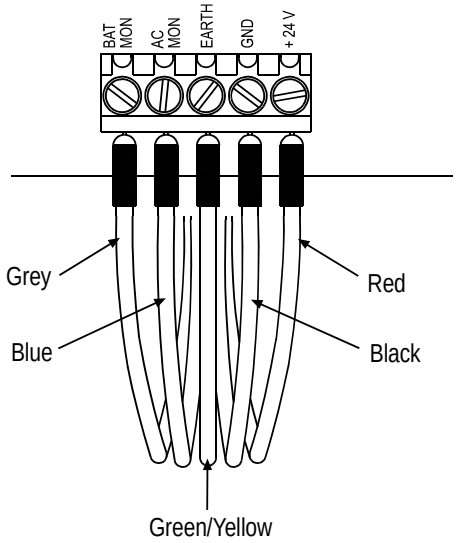


**Figure 4: Control Module/Power Supply Connections**

## 4.2 Circuit Connections

The D8024 FACP is an analog system. It exchanges data and may provide power to devices over two-wire circuits.

**Data Circuit Length** is the distance over the circuit wire from the connection at the control module to the most distant device and back to the control module. Data Circuit Length must include the distance to any device connected to the circuit in a “T” tap. “T” tapping is acceptable in Class B circuits. For specific Class B circuit installation requirements, see NFPA 72.

### 4.2.1 Polling Circuit

Detection devices in the analog system receive power and communicate with the control panel over a two-wire circuit. This digital communications format resists interference from most types of EMI and RF generated noise. Use shielded cable for all detection circuits. Terminate the shield to the earth ground terminal on the D8024 Control Module (see Figure 9). Mineral insulated copper cable (MICC) provides superior screening.

Ground the drain wire to the earth ground terminal on the D8024 Control Module. See Figure 9.

Radionics recommends shielded single pair twisted cable wiring with a drain wire such as Atlas #218 or West Penn Wire/CDT #D293. West Penn Wire/CDT #D293 has a nominal capacitance of 28 pf/ft between conductors.

***Note:*** *The nominal capacitance for shielded single pair twisted cable wiring must not exceed 29 pF per foot. See Section 2.3 “Specifications” for sensor circuit wiring requirements.*

Polling circuits may be wired as Class A or Class B circuits. Radionics recommends Class A configuration with the wiring returning to the D9067 Polling Circuit Module. This allows the module to poll the circuit in both directions, ensuring circuit operation in the event of a single break in the wiring and allowing the panel to identify the location of the break.

| Polling Circuit Length | Wire Gauge |
|---|---|
| Up to 4,000 ft. (1,219 m) | # 18 AWG (1.2 mm) |
| 4,000 to 7,000 ft. (1,219 to 2,134 m) | # 16 AWG (1.5 mm) |

**Table 2: Polling Circuit Length/Wire Gauge**

***Note:*** *The D8024’s Data Terminal Block’s screw terminals can accept # 14 AWG (1.8 mm) wire, however this will reduce the allowable length.*

 Copyright © 2001 Radionics

Any devices in the system that are not analog in design must be connected to a point contact module, such as the D326A, D334A or D339A.

Each analog device is assigned a specific device. Each D9067 Polling Circuit Module can support up to 126 addresses. It is not necessary to wire devices in any particular order in a circuit.

The system is expanded by adding D9067 modules to the control module. The D8024 has slots for two polling circuit modules.

***Note:*** *All analog devices are shipped with a default address of 127. During the installation phase, when addressing the devices, any unaddressed devices can be found by viewing Address 127: 7) View 1) Device. All unaddressed devices will flash their LEDs. To program an unaddressed device, use the D5070 Analog Device Programmer.*

#### 4.2.1.1 D9067 Polling Circuit Module Installation

***Note:*** *For complete installation and operation instructions regarding the D9067, refer to the* D9067 Installation Guide *(P/N: 74-07690-000).*

Analog devices report to the FACP over a polling circuit that connects to a D9067 Polling Circuit Module. The D8024 has two expansion slots for the D9067. See Figure 5.

1) Mount the D9067 Polling Circuit Module on the D8024 Control Module using the hardware provided with the D9067. Begin on the right side of the board in the slot labeled **PL LOOP1**. See Figure 5.

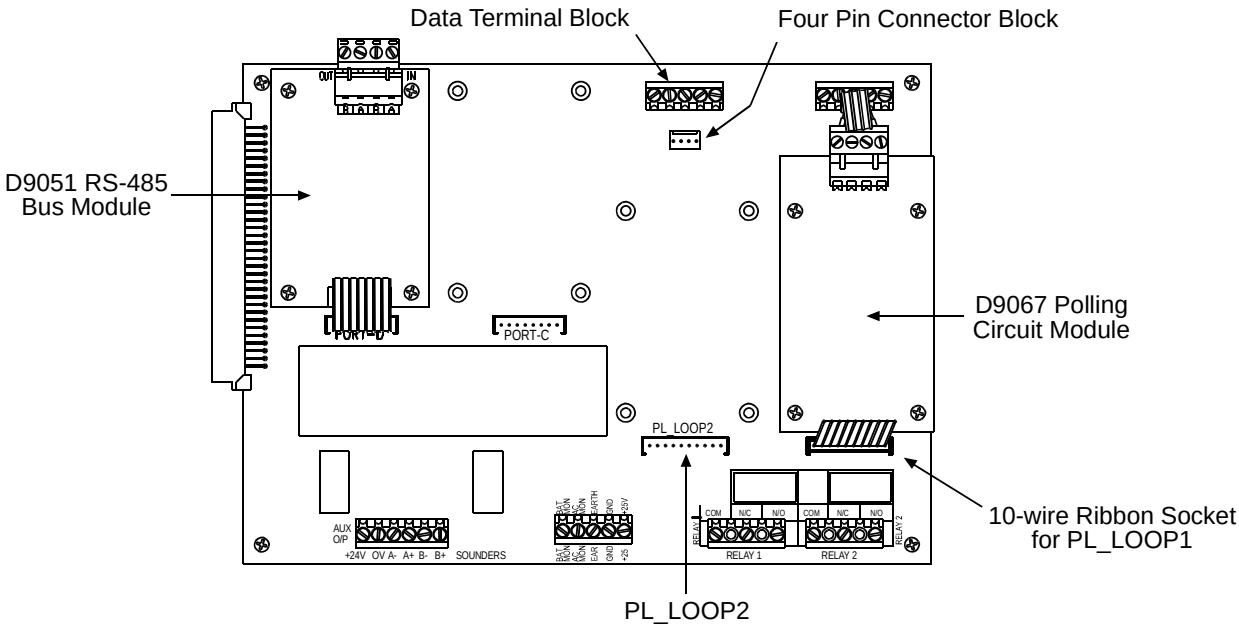


**Figure 5: D9067 Installation**

There are two status display LEDs on the D9067 Polling Circuit Module. See Table 3 for LED actions.

| LED Action | LED Indication |
|---|---|
| Alternate blinking | Normal polling operation |
| Solid | Break on loop (i.e.- Class B jumper missing); trouble message will appear on LCD display |
| Half intensity | Reversed polarity connection on loop |
| Out (dark) | Wire-to-wire short across loop |

**Table 3: D9067 LED Functions**


Copyright © 2001 Radionics

# Terminal Connections

2) Connect the D9067's 10-wire ribbon to the 10-pin plug below it. The female four-wire plug at the top of the board plugs into the four-pin block below the dedicated screw terminal blocks. See Figures 5 and 6.

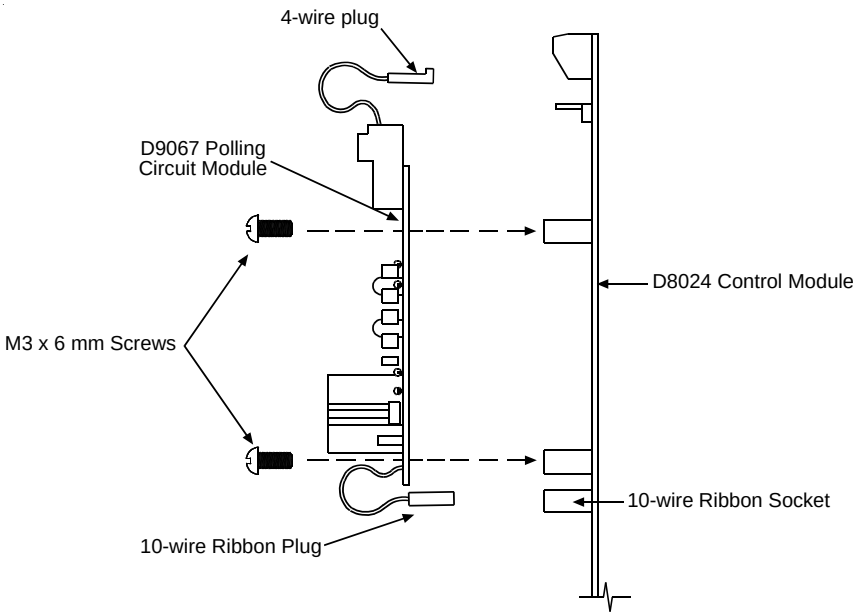


**Figure 6: D9067 Installation (side view)**

#### 4.2.1.2 Class B, Style 4 Circuit Connections

***Note:*** *The polling circuit is power limited.*

To wire the polling circuit as Class B, Style 4, follow these steps:

1) Connect the Data/Power Positive (+) wire of the polling circuit to the (+) terminal of the Data Terminal Block at the top of the D8024 Control Module.
2) Connect the Data/Power Common (-) wire of the polling circuit to the (-) terminal of the Data Terminal Block.
3) Connect the (+) and (-) terminals of the data terminal block with jumper wires.

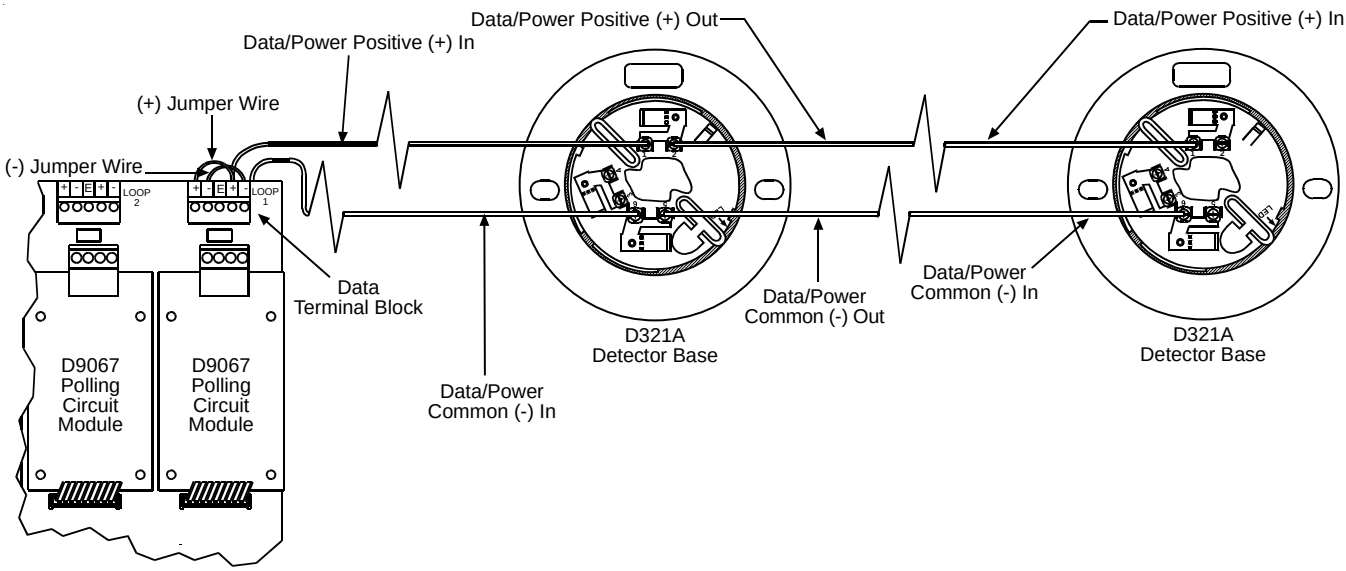


**Figure 7: Class B, Style 4 Circuit Connections**

 Copyright © 2001 Radionics

#### 4.2.1.3 Class A, Style 6 Circuit Connections

***Note:*** *The polling circuit is power limited.*

To wire the polling circuit as Class A, Style 6, follow these steps:

1) Connect the Data/Power Positive (+) wire of the polling circuit to the (+) terminal of the Data Terminal Block at the top of the D8024 Control Module.
2) Connect the Data/Power Common (-) wire of the polling circuit to the (-) terminal of the Data Terminal Block.
3) Connect the returning Data/Power wires to the respective terminals.
4) Connect the drain wire for shielded cable to the (E) terminal (earth ground) on the Data Terminal Block.

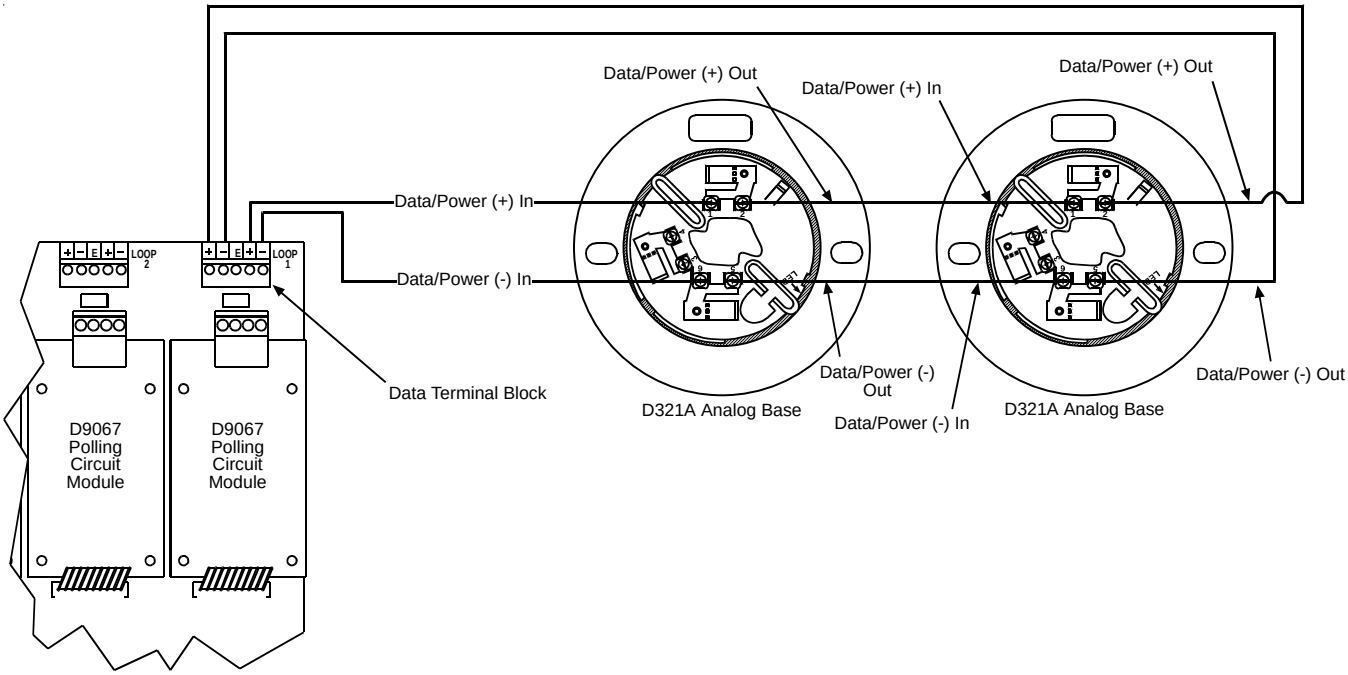


**Figure 8: Class A, Style 6 Circuit Connections**

IMPORTANT

***An improperly grounded shielded cable may aggravate rather than eliminate noise problems. Reconnect the shielded cable drain each time the cable is cut to install a device.***

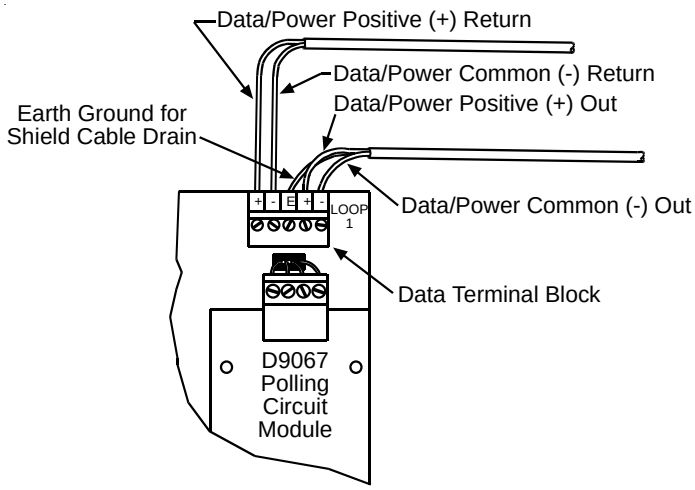


**Figure 9: Earth Ground Connections**


Copyright © 2001 Radionics

# Terminal Connections

### 4.2.2 Peripheral Circuit

The RS-485 Circuit provides an optically isolated data interface between the control module and command centers and annunciators, networked panels and serial peripherals. A shielded twisted-pair wiring circuit connects to the D9051 RS-485 Bus Module. The two ports on the left side of the control module are mounting points, depending on the application, for the D9051 modules.

Circuit length is the distance over the circuit from the connection at the D9051 Module to the most distant device and back to the D9051 Module. The maximum RS-485 circuit length is 4,920 ft. (1,500 m). Use shielded twisted-pair cable Type 2, UL style 2092, such as Data Grade Cable D293 or its equal.

| RS-485 Peripheral Circuit Length | Wire Gauge |
|---|---|
| Up to 4,920 ft. (1,500 m) | #18 AWG (1.2 mm) |

**Table 4: RS-485 Peripheral Circuit Length/Wire Gauge**

The D9052 RS-232 Bus Module provides an isolated interface between the control module and a computer graphics package, such as Radionics' D9061 Graphics Display Software.

#### 4.2.2.1 D9051 RS-485 Bus Module Installation

IMPORTANT

***Inform the operator and the local Authority Having Jurisdiction (AHJ) before installing this module in an existing system. Disconnect all power to the FACP before installing this module.***

***Note:*** *For complete installation and operation instructions regarding the D9051, refer to the* D9051 Installation Guide *(P/N: 34048).*

The D9051 module is an RS-485 Network Expander. It provides an isolated Class B, Style 4 or Class A, Style 6 data interface between the control module and command centers, annunciators and networked panels.

The D8024 can support up to 31 peripheral communications devices on the RS-485 bus. Each device must be assigned a unique address.

When installing the D9051, follow these steps:

1) Remove AC power from the system at the dedicated 120 VAC breaker, "lock out" the breaker and remove the standby battery power before making or breaking any connections to the FACP.
2) Plug the D9051 into either Port C or Port D on the D8024 Control Module. These are the two ports on the left side of the control module.

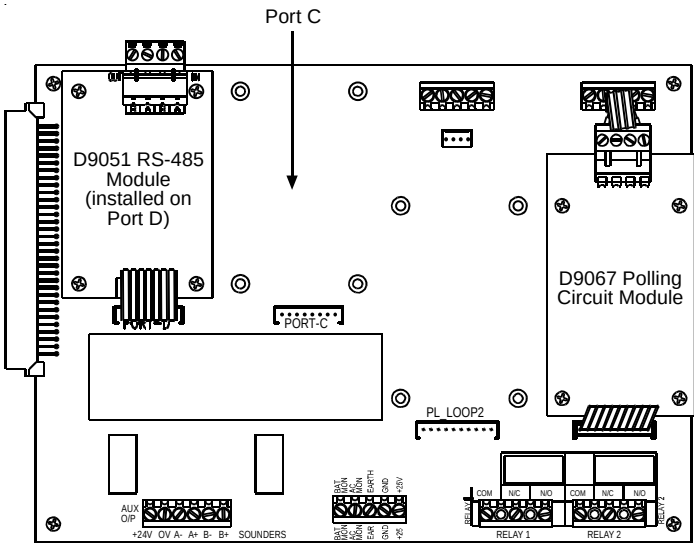


**Figure 10: Port Locations for the D9051 RS-485 Bus Module**

 Copyright © 2001 Radionics

#### 4.2.2.2 Peripheral Circuit Wiring (Port D)

Port D on the D8024 Control Module supports a peripheral circuit for D9069 Remote Annunciators, D9070 Fire System Controllers, D9072 Four-Output NAC Modules and D9078 LED Driver Modules.

The two-wire RS-485 communication circuit may be connected to either or both sides (“IN or “OUT”) of the D9051 terminal block.

1) Connect the “B” wire to the “B” terminal (left-side terminal) of the terminal block on the top of the D9051 module.
2) Connect the “A” wire to the “A” terminal next to it.
3) If shielded cable is used, connect the drain wire(s) to the “E” terminal of the terminal block on the control module.

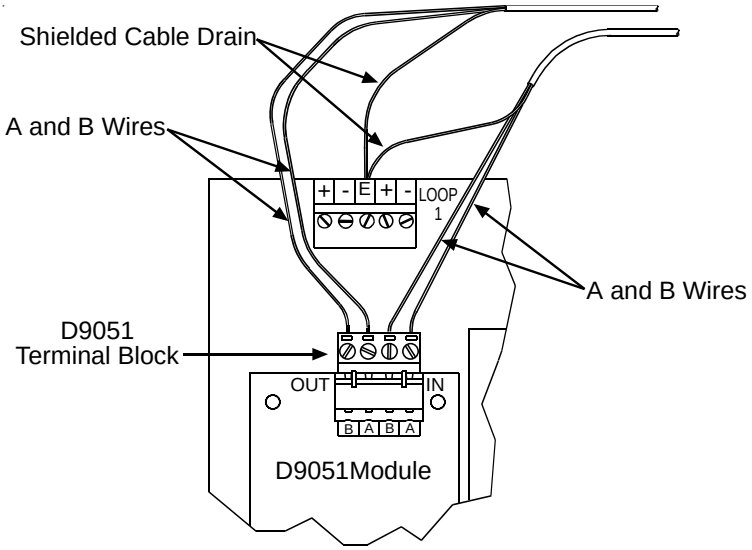


**Figure 11: Port D Peripheral Circuit Wiring**

IMPORTANT

***An improperly grounded shielded cable may aggravate rather than eliminate noise problems. Reconnect the shielded cable drain each time the cable is cut to install a device.***

#### 4.2.2.3 Network Circuit Wiring (Port C)

Port C supports an RS-485 panel-to-master data link, or an RS-232 panel-to-graphics data link.

Serial network data communications take place using D9051 RS-485 Bus Modules attached to Serial Port C on the control module.

The panels are wired in series to an NFPA Class B, Style 3.5 Signaling Line Circuit (SLC) on the appropriate RS-485 bus. The RS-485 terminals on the D9051 are polarity sensitive. The channels are marked “A” and “B”, and data wires should be connected “A” to “A” and “B” to “B”. Cross-wiring between channels will result in corrupted data, but will not damage equipment.

Use shielded twisted pair such as the Data Grade Cable D293, Beldon 8670 two-core twisted pair, or non-shielded #18 AWG (1.2 mm) gauge cable from Atlas, Guardian Sound and Security or their equals. To avoid data corruption, route cables so that they do not run next to other cables.

The total length of the data cables between the two end panels must not exceed 3,935 ft. (1,200 m) per channel.


Copyright © 2001 Radionics

# Terminal Connections

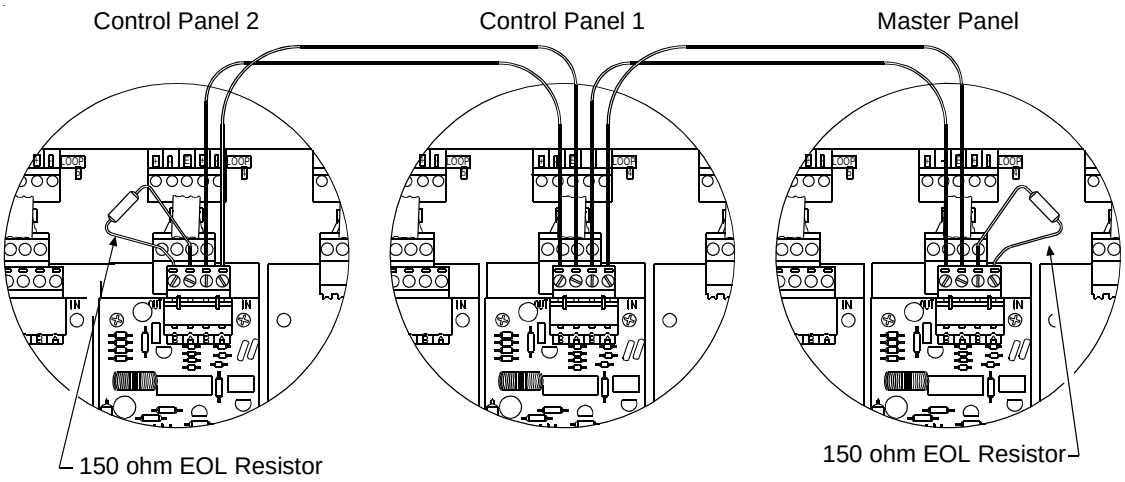


**Figure 12: Port C Network Circuit Wiring**

#### 4.2.2.4 Panel Network Connections

The D8024 can be connected in two types of network configurations: the Shared Zone Network, in which the panels share common zones and function as one system, and the Report and Control Network, in which individual panels or sub-systems are networked for reporting and control purposes only. For more information on both configurations, see the *D8024, D9024, D10024 Networking Guide* (P/N: 34377).

- **Shared Zone Network:** A Shared Zone Network is usually an installation in a single site or building. Up to four panels can be networked together with one panel designated to act as the master panel. The number of zones in this configuration is limited by the panel in the system with the least number of zones. Shared zone networks using the D8024 FACP are limited to 20 zones. This network acts as one large system.
- **Report and Control Network:** The Report and Control Network links the individual panels to a master panel for reporting and control. Up to ten D8024, D9024 and/or D10024 panels may be networked together in a Report and Control Network with one dedicated panel designated to act as the master panel.

 Copyright © 2001 Radionics

#### 4.2.2.5 D9052 RS-232 Bus Module Installation

IMPORTANT

***Inform the operator and the local Authority Having Jurisdiction (AHJ) before installing this module in an existing system. Disconnect all power to the FACP before installing this module.***

IMPORTANT

***The D8024 cannot simultaneously network and output to the D9052 RS-232 Bus Module. Only one application can be supported at a time. If the D8024 is connected to a graphics PC, then it cannot be connected in a network.***

***Note:*** *For complete installation and operation instructions regarding the D9052, refer to the* D9052 Installation Guide *(P/N: 34096).*

The D9052 RS-232 Bus Module provides an electrically isolated serial interface and it is for supplementary use only. It is used for communication with serial devices over #18 AWG (1.2 mm) twisted pair cable over a distance of up to 50 ft. (15 m). Port C supports serial connections for panel-to-graphics data link or a modem.

To install the D9052 on the D8024 Control Module, follow these steps:

1) Remove AC power from the system at the dedicated 120 VAC breaker, “lock out” the breaker and remove the standby battery power before making or breaking any connections to the FACP.
2) Plug the D9052 into either Port C or Port D.
3) Connect the eight-wire ribbon connector into the socket below the port.

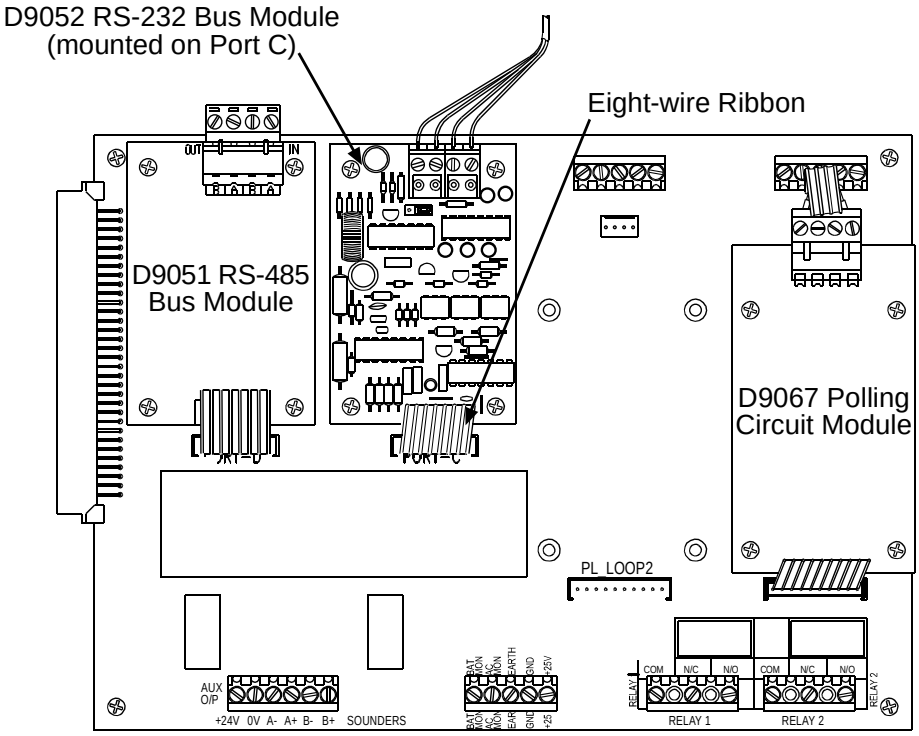


**Figure 13: Port Locations for the D9052 RS-232 Bus Module**


Copyright © 2001 Radionics

# Terminal Connections

4) Connect the serial input/output (modem) wiring to the terminal block at the top of the D9052.

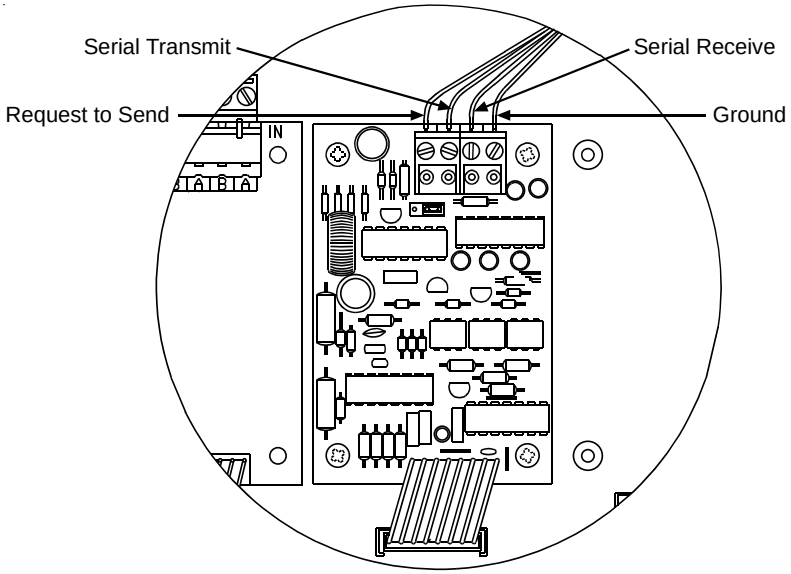


**Figure 14: D9052 Serial Input/Output Connections**

### 4.2.3 Notification Appliance Circuit (NAC) and Output Circuit Connections

The D8024 has two power-limited and supervised Class B, Style W NACs. The terminal blocks for these circuits are located at the lower left edge of the D8024 Control Module. Each NAC must be terminated with a 6.8 k Ω EOL resistor. Two resistors for the NACs are included in the D8024's Literature Pack. Each circuit has a maximum rating of 1 A. If the system requires more than two circuits, use the D327A Analog NAC Module to add circuits as required.

Use only the devices listed on the *D8024, D9024, D10024 Compatible Device List* (P/N: 73-07674-000) on the D8024's NACs.

The D8024 has terminals for a power-limited auxiliary 24 V circuit at the lower left of the control module (AUX O/P). This circuit is rated at 340 mA maximum.

The total current of the three circuits (two NACs (SOUNDERS) plus "AUX O/P") must not exceed 1.3 A.

The D8024 has two programmable relay contacts rated at 24 VDC, 1 A each.

WARNING

***Do not connect any wiring that is not power-limited to the relay contacts.***

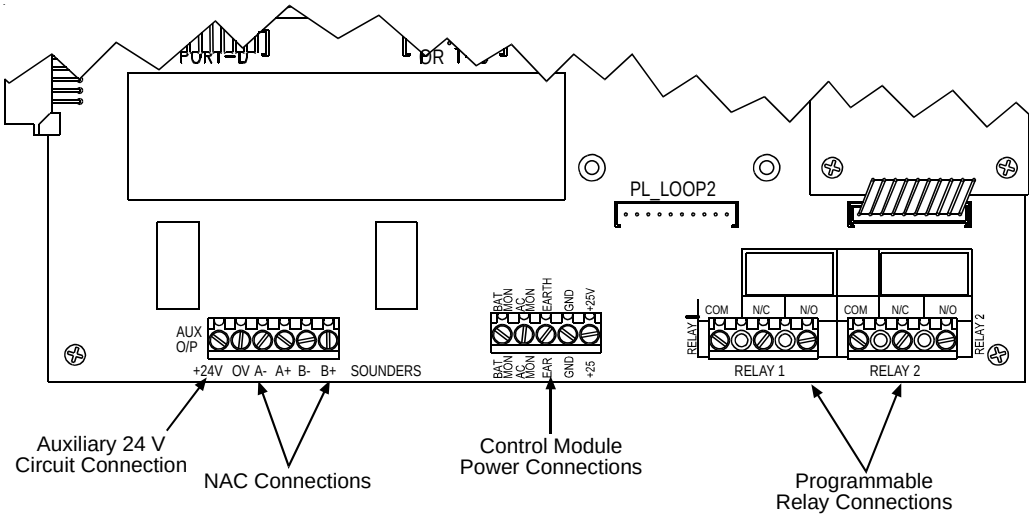


**Figure 15: NAC, Auxiliary Power and RelayTerminals**

 Copyright © 2001 Radionics

### 4.2.4 Central Station/Remote Application (D2071A DACT)

IMPORTANT

***Inform the operator and the local Authority Having Jurisdiction (AHJ) before installing this module in an existing system. Disconnect all power to the FACP before installing this module.***

IMPORTANT

***On the D8024, Relay 1 should be programmed for alarm purposes and Relay 2 for trouble conditions.***

***Note:*** *For complete installation and operation instructions regarding the D2071A, refer to the* D2071A Installation and Programming Guide *(P/N: 74-06200-000).*

***Note:*** *Due to space constraints inside the D8024 enclosure, use a D2071AC kit when connecting the D8024 to a D2071A. The D2071AC kit includes a D2071A DACT, a D4103R enclosure and a hard-wired transformer. Mount the D2071A in the D4103R and wire it as described in the instructions included with the D2071AC kit.*

The D2071A Fire Control/Communicator (DACT) is a three-zone digital alarm communicator transmitter (DACT) that uses two phone lines to transmit to a receiver for central station and remote applications. A Phone Fail LED and buzzer annunciate phone line failures. In this application, Zone 1 (initiating) monitors the alarm output of the FACP. Zone 2 (supervisory) monitors the trouble output of the FACP. Zone 3 is not used.

Additional settings:

- **12 Volt Mode:** NO
- **Class B Mode:** 3
- **Retard Time:** 0
- **Reset Time:** 0

Use these steps to connect the D2071A to the D8024:

1) Remove AC power from the system at the dedicated 120 VAC breaker, “lock out” the breaker and remove the standby battery power before making or breaking any connections to the FACP.
2) Mount the D2071A in an accessory enclosure. Refer to the *D2071A Installation and Programming Guide* (P/N: 74-06200-000) for mounting instructions.
3) Connect Terminals 1 and 2 from the D2071A to the 24 V Auxiliary Power Terminal on the D8024 Control Module.
4) Connect Terminals 6 and 7 from the D2071A to **N/O** on Relay 1.
5) Connect 8 and 9 from the D2071A to **COM** on Relay 1.
6) Connect Terminal 10 from the D2071A to **N/C** on Relay 2.
7) Connect Terminal 11 from the D2071A to **COM** on Relay 2.
8) Connect Terminals 11 and 12 from the D2071A with a 1.8 k Ω EOL resistor.

See Figure 16 for details.


Copyright © 2001 Radionics

# Terminal Connections

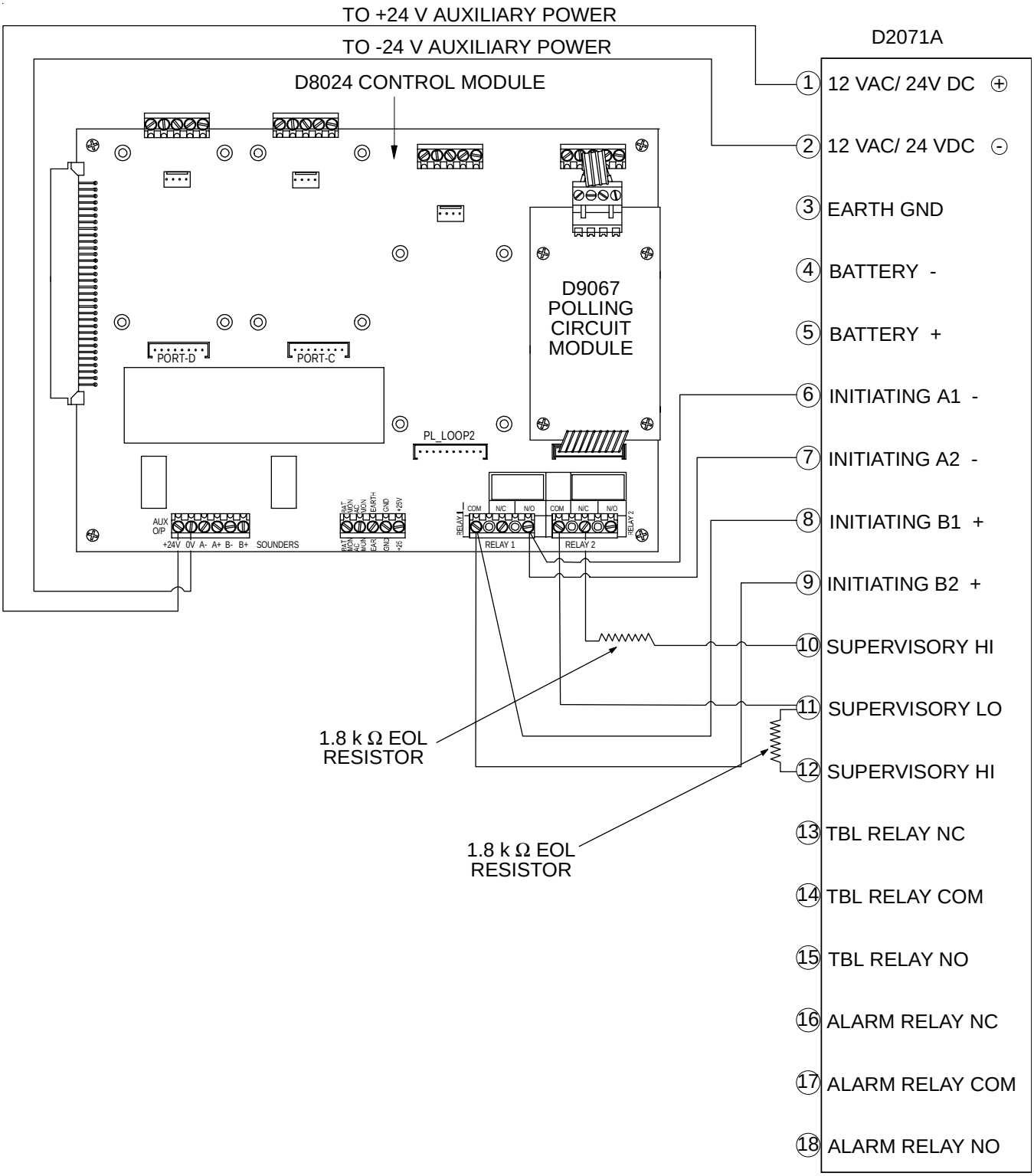


**Figure 16: D8024 to D2071A Wiring Connections**

 Copyright © 2001 Radionics

### 4.2.5 Sprinkler Supervision (D2071A DACT)

IMPORTANT

***To provide a fire alarm output to the D2071A, a D130 Relay Module is required to obtain the additional necessary output to the D2071A.***

IMPORTANT

***The Notification Appliance Circuit (NAC) (SOUNDERS) connected to the D130 Relay Module must be programmed to activate on all zone alarms.***

***Note:*** *For complete installation and operation instructions regarding the D2071A, refer to the* D2071A Installation and Programming Guide *(P/N: 74-06200-000).*

The D8024 can be wired to provides sprinkler supervision. To provide an outlet to the D2071A for sprinkler supervision, follow these steps:

1) Connect Relay 1 on the D8024 to Zone 2 on the D2071A. Relay 1 is programmed to activate on a fault.

2) Connect Relay 2 on the D8024 to Zone 3 on the D2071A. Relay 2 is programmed to activate on Event 100.

When sprinkler supervisory reporting is required, three conditions are required to be signaled from the panel to the D2071A: fire alarm, supervisory alarm and system trouble. Two conditions can be generated by the two relays on the panel (trouble and supervisory alarm, as shown in Figure 16). The fire alarm can then be generated as shown in Figure 17.

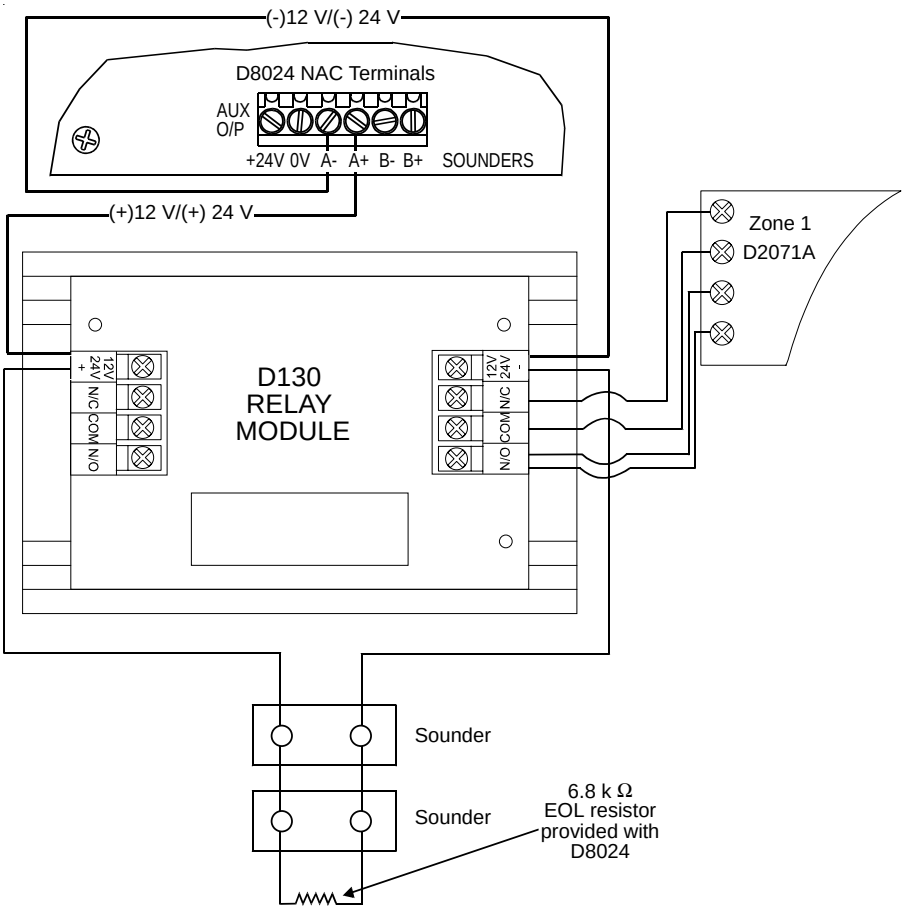


**Figure 17: Wiring the D8024 for Sprinkler Supervision**


Copyright © 2001 Radionics

# Terminal Connections

Care must be taken to program the panel and dialer to generate and report the correct conditions. See Table 5.

| Signal | Relay | Panel Programming | D2071A Input | D2071A Report |
|---|---|---|---|---|
| Alarm | NAC | Program the selected NAC to activate on all fire alarm conditions. | 1 | 01 |
| Trouble | 2 | Relay 2 Trouble | 2 | 02 |
| Supervisory | 1 | Relay 1 Supervisory | 3 | 03 |

**Table 5: Sprinkler Supervisory Reporting Conditions**

### 4.2.6 Trouble Annunciation (D2071A DACT)

***Note:*** *For complete installation and operation instructions regarding the D2071A, refer to the* D2071A Installation and Programming Guide *(P/N: 74-06200-000).*

The D2071A can be wired so that a trouble condition on the D2071A will cause a trouble condition on a point implemented by a D334A or D326A Point Contact Module. See Figure 18.

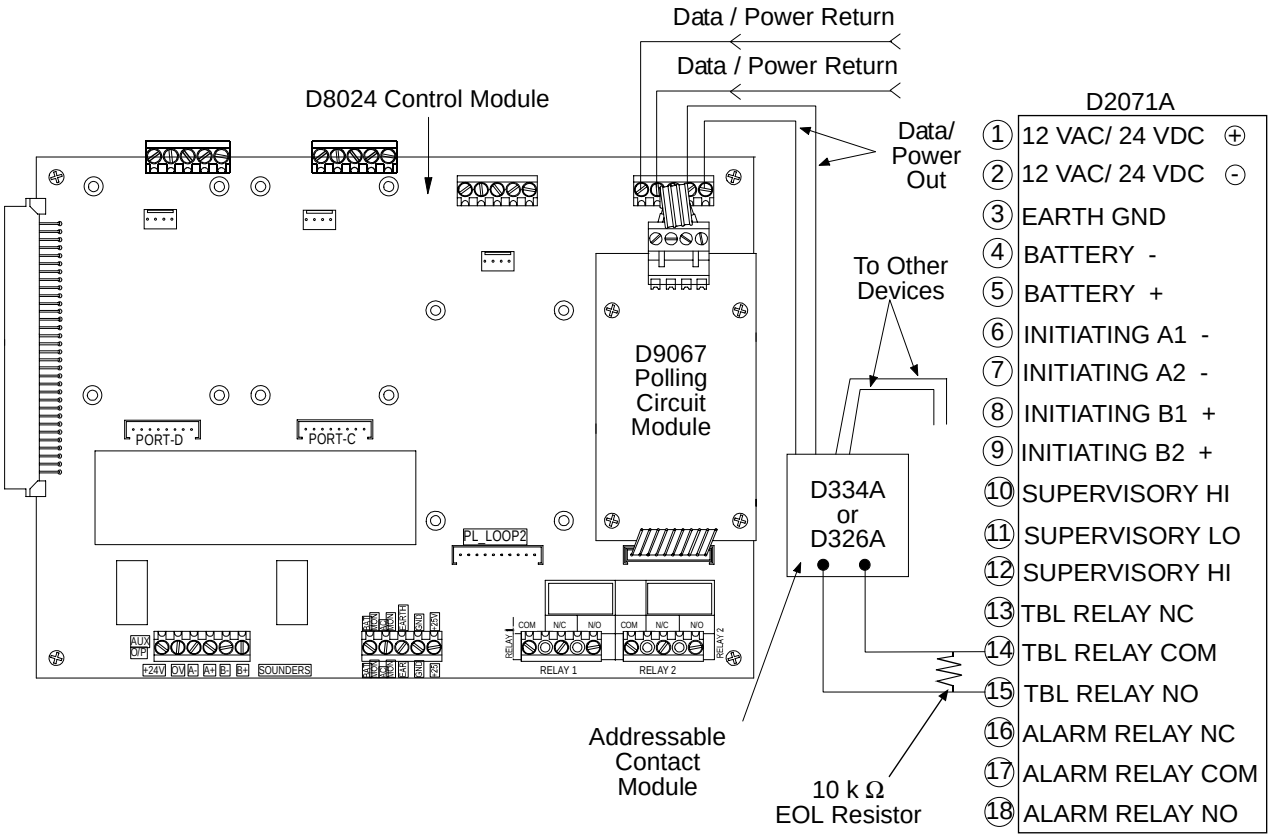


**Figure 18: Wiring the D2071A for Trouble Annunciation on the D8024**

 Copyright © 2001 Radionics

### 4.2.7 Remote Signaling (D185 Reverse Polarity Module)

IMPORTANT

***Inform the operator and the local Authority Having Jurisdiction (AHJ) before installing this module in an existing system. Disconnect all power to the FACP before installing this module.***

***Note:*** *For complete installation and operation instructions regarding the D185, refer to the* D185 Installation Guide *(P/N: 32906).*

Use the following steps to install the D185 Reverse Polarity Module to the D8024 for Remote Station Service, as defined by NFPA 72.

1) Install the D185 in accordance with the installation instructions provided with the module. To accommodate space constraints inside the D8024's enclosure, the D185 should be installed in a suitable enclosure such as Radionics' D8103 Standard Enclosure. Any connections made from the enclosure to the D8024 should be made in conduit.

2) Connect the D185 to the control panel and point contact module as shown in Figure 19.

IMPORTANT

***Be sure to connect the supervisory zone input on the D185 to Terminal A of the point contact module.***

3) Configure the NAC (SOUNDER) that is connected to the D185 module to sound on alarms on all zones.

4) Configure the point contact module's action to "Fault." This will indicate system trouble on the FACP when the D185 is placed in the test mode.

5) Be sure to calculate the D185 current draw into the Normal Standby and Alarm Conditions for standby battery calculation. NFPA 72 requires 60 hours of standby power for Remote Station Service (see "Remote Station Service Ampere Hour Calculation Formula" in Section 2.4).

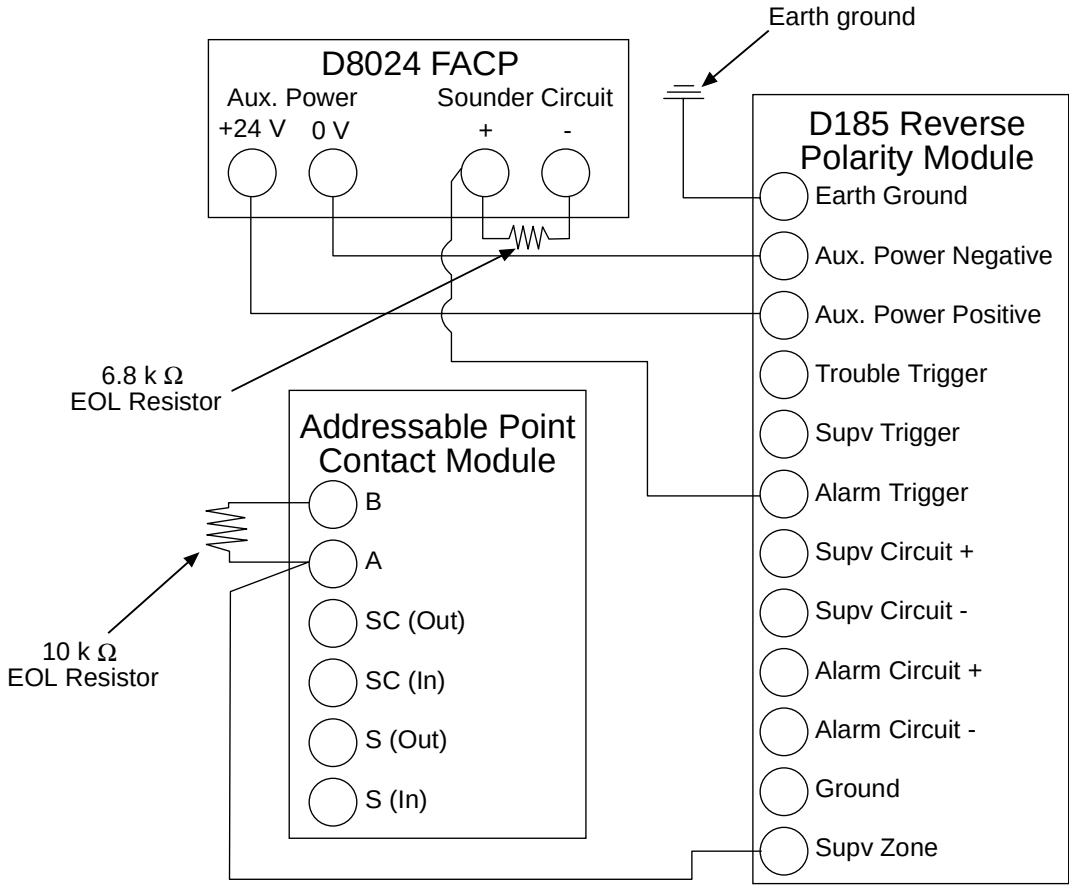


**Figure 19: Remote Station Signaling**


Copyright © 2001 Radionics

# Terminal Connections

**Notes:**

 Copyright © 2001 Radionics

# Index

**B**

Battery
- Standby Battery Calculations ..... 9
- Standby Battery Selection ..... 9

**C**

Central Station/Remote Application ..... 25
Circuit Connections ..... 16
Class A (Style 6) Circuit Connections ..... 19
Class B (Style 4) Circuit Connections ..... 18
Compatible Devices ..... 11

**D**

D130 Relay Module ..... 27
D185 Reverse Polarity Module ..... 29
D2071A DACT ..... 25, 27, 28
D8024 Control Module ..... 7
Data Circuit Length ..... 16

**E**

Earth Ground Connections ..... 19

**I**

Installation
- Enclosure ..... 13

**L**

Listings and Approvals ..... 8
Local Systems Ampere Hour Calculation Formula ... 10

**N**

NAC
- Circuit Connections ..... 24
- Specifications ..... 8

**O**

Overview ..... 7

**P**

Panel Network Connections
- Report and Control Network ..... 22
- Shared Zone Network ..... 22

Peripheral Circuit
- D9051 RS-485 Bus Module ..... 20
- D9052 RS-232 Bus Module ..... 23
- RS-485 Peripheral Circuit Length/Wire Gauge ..... 20

Polling Circuit
- D9067 Polling Circuit Module ..... 17
- Polling Circuit Length/Wire Gauge ..... 16
- Specificaitons ..... 8

Port C Network Circuit Wiring ..... 22

Power
- AC Power Connections ..... 15
- Brown-out Voltage ..... 8
- Control Module/Power Supply Connections ..... 16
- Operating Current ..... 8
- Operating Voltage ..... 8
- Power Supply ..... 8

**R**

Relays
- Circuit Connections ..... 24
- Specificaitons ..... 8

Remote Signaling ..... 29
Remote Station Service Ampere Hour Calculation For 10

**S**

Specifications ..... 8
Sprinkler Supervision ..... 27
Sprinkler Supervisory Reporting Conditions ..... 28
System Overview ..... 7

**T**

“T” tapping ..... 16
Terminal Connections ..... 15
Trouble Annunciation ..... 28


Copyright © 2001 Radionics