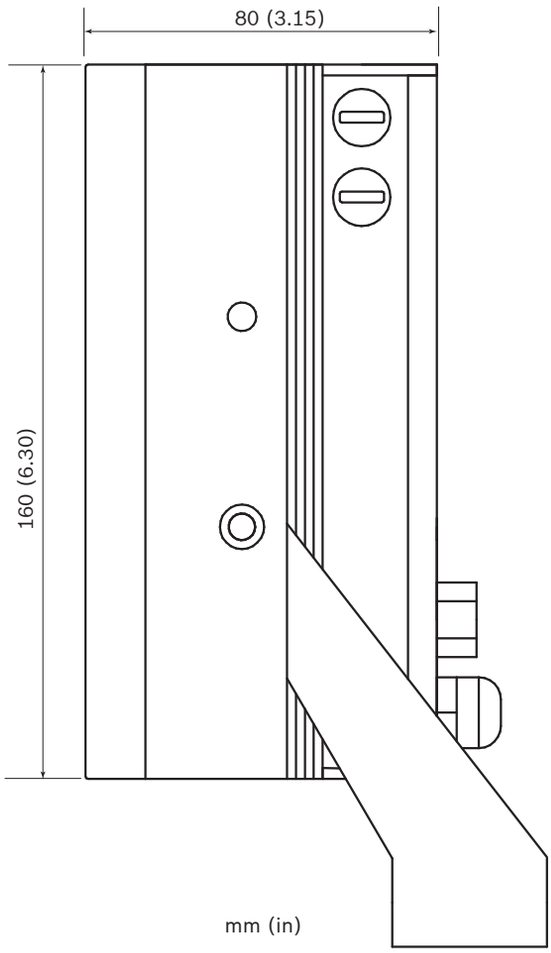
80 (3.15)
160 (6.30)
mm (in)

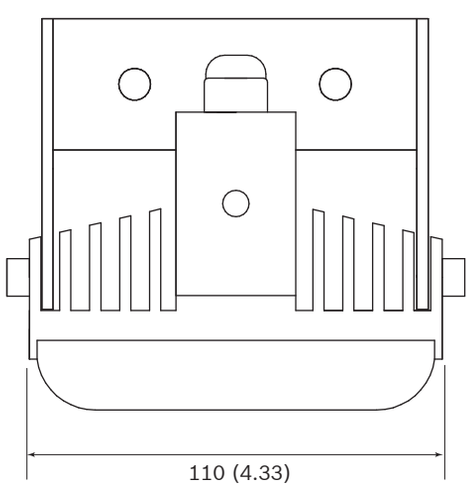
110 (4.33)